DIGITUS®

DN-48000 (4016032490302)

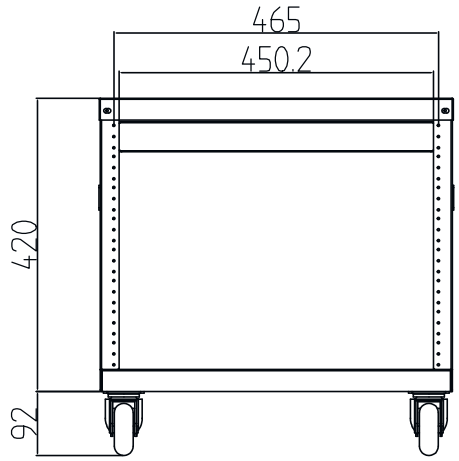

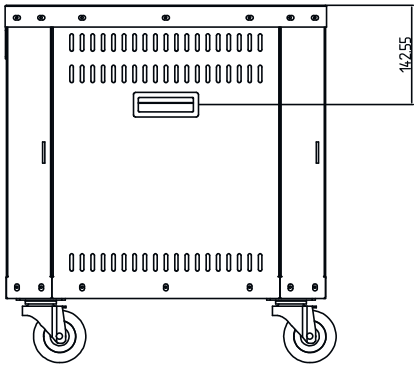

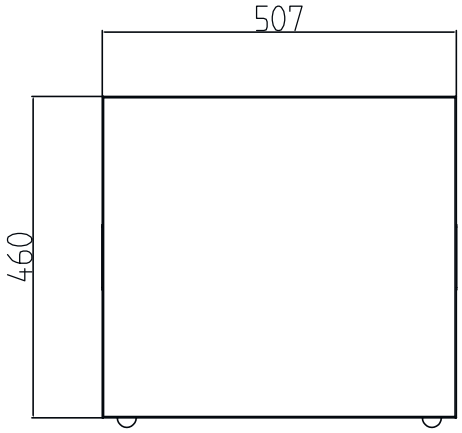

DN-48000 (4016032490302)

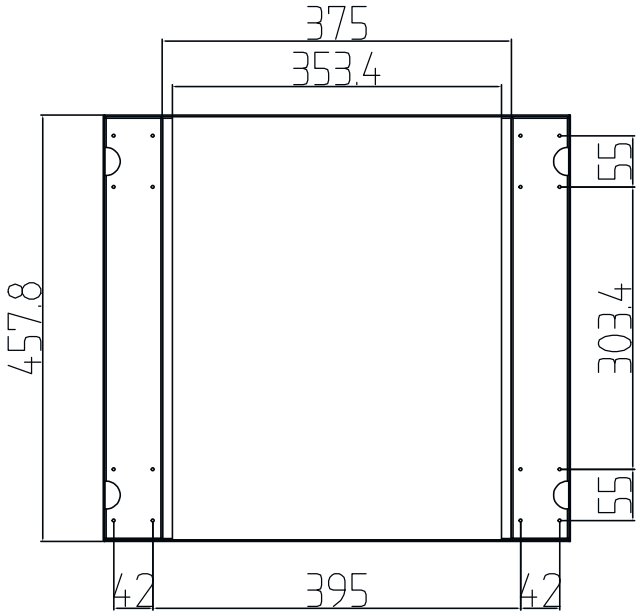

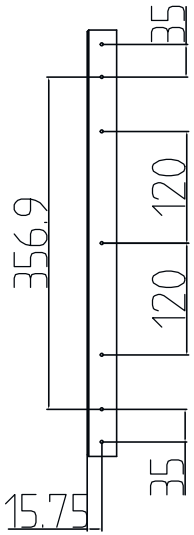

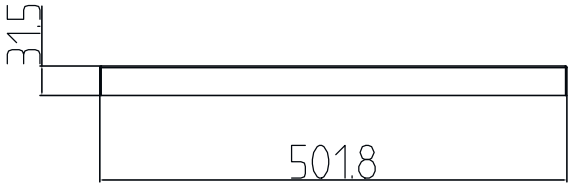

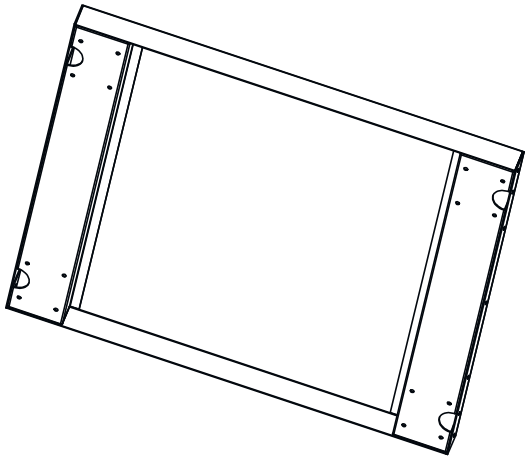

DN-48000 (4016032490302)

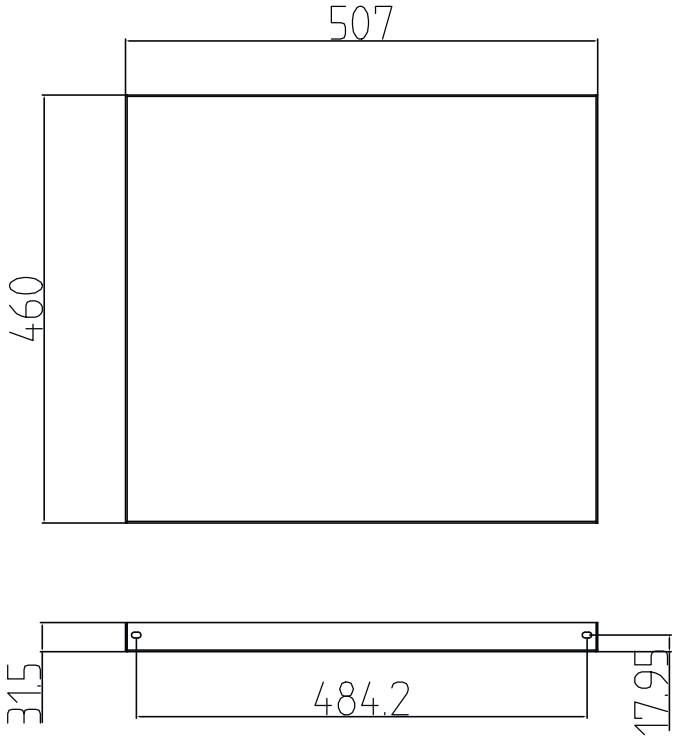

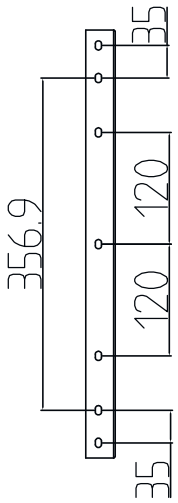

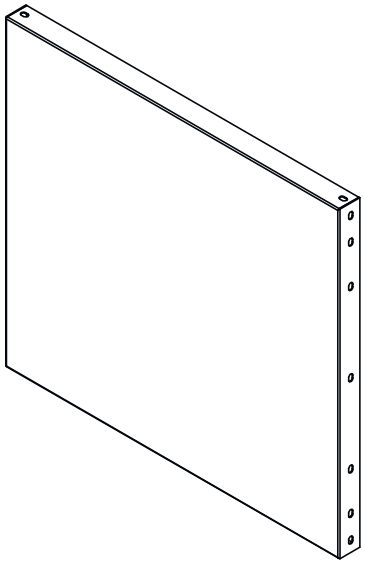

DN-48000 (4016032490302)

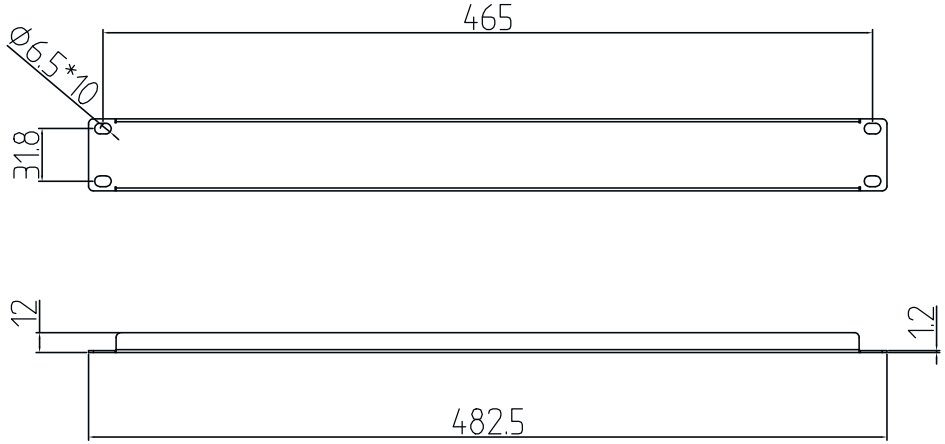

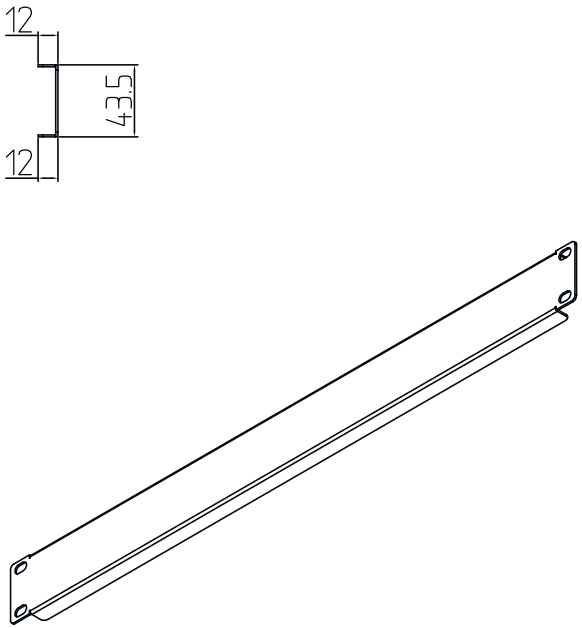

DIGITUS®

DN-48000 (4016032490302)

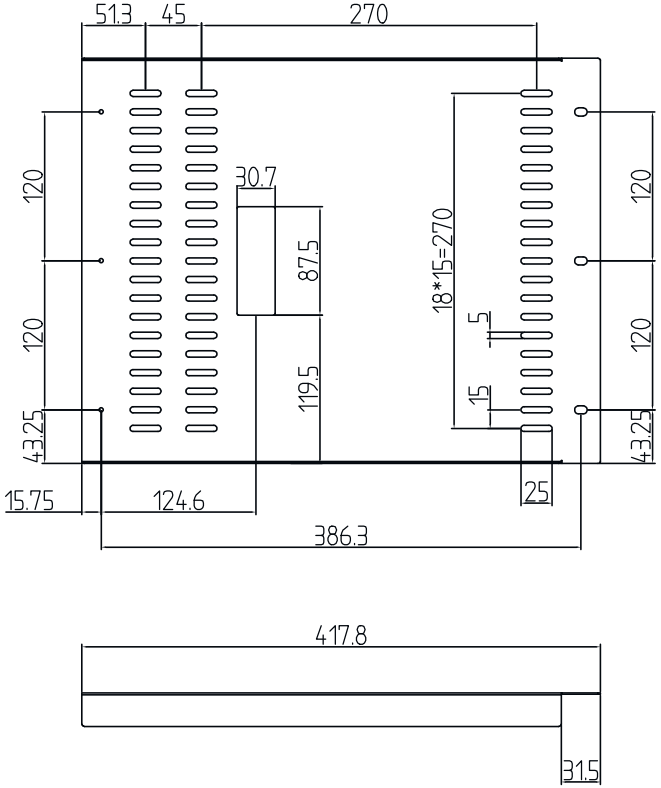

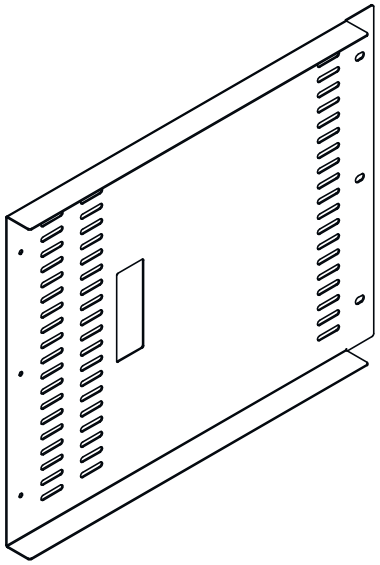
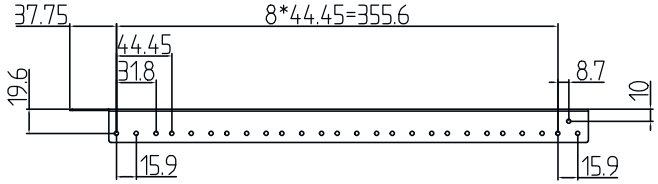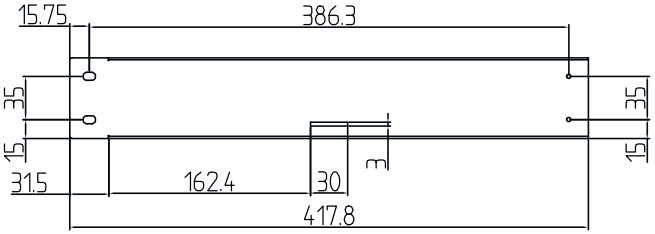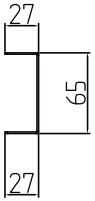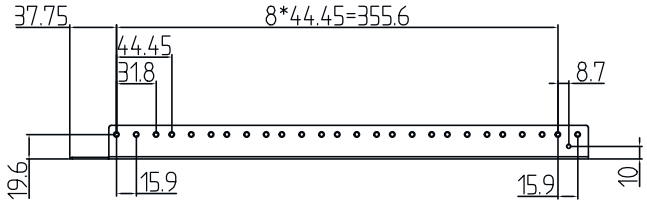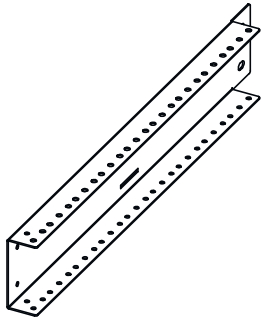
DN-48000 (4016032490302)